

LỌC CHỮ Y PN16- ARI

MODEL	12.050 / 22.050 / 23.050
NHÃN HIỆU	ARI - ARMATUREN
TÊN SẢN PHẨM	LỌC CHỮ Y NỐI BÍCH DIN PN 16 / PN 25 / PN 40
Kiểu Nối	Mặt bích DIN - PN 16 - PN 25 - PN 40
Thân Van	Gang đúc En- JL1040 & gang dẻo En- JS1049
Nắp Van	Gang đúc En- JL1040 & gang dẻo En- JS1049
Lưới Lọc	Thép không gỉ- Inox - SUS 316 L
Nhiệt Độ	Max -10°C ~ +350°C
Áp Lực	Làm việc maximum 16 bar ~ 25 bar ~ 40 bar
Kích Cỡ	DN 15 → DN 300 ~ (½" inch → 12" inch)
Sử Dụng	Dầu tải nhiệt, hơi nóng, khí nén, nước, xăng, dầu, gas
Tình Trạng	Hàng có sẵn, mới 100%
Trang Số	02

Xuất Xứ	Đức
Đơn Giá	
	Xin liên hệ

ARMATUREN

ARI-Strainer, made of cast iron, nodular iron and cast steel

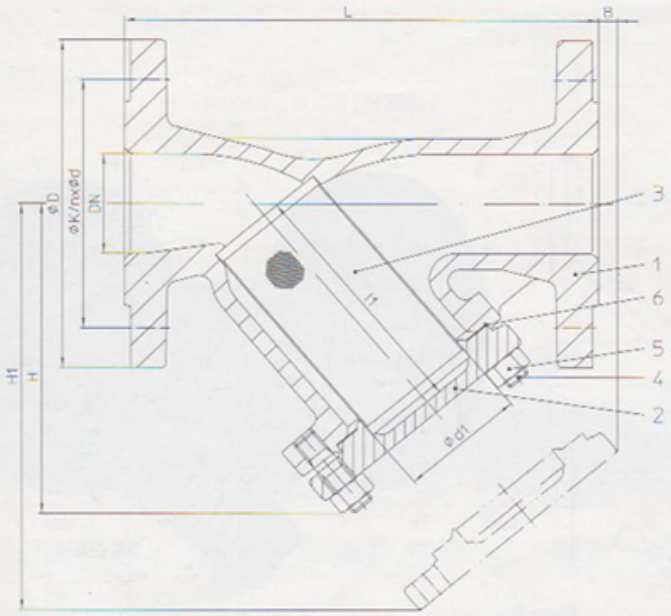

Figure	Nominal pressure	Material	Nominal diameters
10.050	PN 6	EN-JL1040	DN 15-200
12.050	PN 16	EN-JL1040	DN 15-300
22.050	PN 16	EN-JS1049	DN 15-300
23.050	PN 25	EN-JS1049	DN 15-150
34.050	PN 25	1.0619+N	DN 15-200
35.050	PN 40	1.0619+N	DN 15-200
Test: German "TA-Luft" TÜV-Test-No. 922-9204866			

Selection of possible applications:

- Industry
- Powerstations
- Flue gas purification plant
- Processing technology
- Gas supply
- Vapour facilities
- Thermal oil applications
- Recycling facilities
- Vacuum plant
- Ammonia
- Hot water
- Heating plant
- District heating
- Cooling and freezing systems
- General plant manufacturing
- Steam systems

- other applications on request -

Weights (kg)

Figure-No. DN	15	20	25	32	40	50	65	80	100	125	150	200	250	300	350	400	500
10.050	2,5	3,0	4,5	5,5	7,0	9,0	13,0	19,0	26,0	38,0	54,0	110,0	--	--	on request possible in straight through form		
12.050	3,0	4,0	5,0	7,0	9,0	12,0	16,0	21,0	30,0	43,0	61,0	121,0	154,0	335,0			
22.050	3,5	4,0	5,5	7,0	9,0	12,0	16,0	21,0	28,0	41,0	58,0	115,0	154,0	335,0			
23.050	3,5	4,0	5,5	7,0	9,0	12,0	16,0	21,0	32,0	47,0	64,0	--	--	--			
34.050	4,0	5,0	6,0	8,0	10,0	13,0	19,0	24,5	35,0	51,0	71,0	144,0	--	--			
35.050	4,0	5,0	6,0	8,0	10,0	13,0	19,0	24,5	35,0	51,0	71,0	144,0	--	--			

ARI-Strainer, made of stainless steel (1.4408)

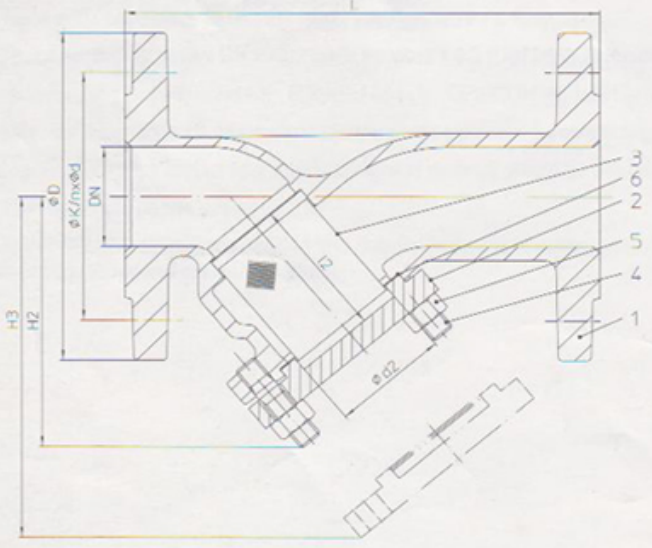

Figure	Nominal pressure	Material	Nominal diameters
52.059	PN 16	1.4408	DN 15-200
54.059	PN 25	1.4408	DN 15-200
55.059	PN 40	1.4408	DN 15-200
Test: German "TA-Luft" TÜV-Test-No. 922-9204866			

Selection of possible applications:

- Recycling facilities
- Chemical Industry
- Hospital technology
- Processing technology
- Process water installations
- Installations with aggressive media

- other applications on request -

Weights (kg)

Figure-No. DN	15	20	25	32	40	50	65	80	100	125	150	200	250	300	350	400	500
52.059	4,0	5,0	6,0	8,0	10,0	13,0	19,0	24,5	35,0	51,0	71,0	144,0	on request				
54.059	4,0	5,0	6,0	8,0	10,0	13,0	19,0	24,5	35,0	51,0	71,0	144,0					
55.059	4,0	5,0	6,0	8,0	10,0	13,0	19,0	24,5	35,0	51,0	71,0	144,0					

Dimensions, Kvs- and Zeta-values

DN	L	H	H1	H2	H3	B	Screen standard (w)	Screen fine (w)	d1	d2	l1	l2	Standard screen Y-pattern Kvs	Standard screen Y-pattern Zeta	Fine screen Y-pattern Kvs	Fine screen Y-pattern Zeta	Y-pattern V [1]
15	130	90	135	94	130	10	1	0,25	23,0	25,0	56	48	6,9	1,7	6,2	1,9	10,0
20	150	100	150	94	138	10			28,0	25,0	68	48	10,8	2,2	10,1	2,4	8,4
25	160	115	180	102	150	25			36,0	31,0	82	57	17,8	1,9	16,8	2,2	8,3
32	180	125	205	102	143	35			42,0	36,0	98	57	26,1	2,4	24,3	2,8	7,1
40	200	150	235	123	166	45			50,0	46,0	114	68	36,7	3,0	32,9	3,7	6,8
50	230	160	250	126	172	45			61,5	55,5	119	70	61,0	2,7	49,5	4,0	5,2
65	290	180	285	148	206	25	1,25		78,5	69,5	134	85	98,6	2,9	80,3	4,9	4,4
80	310	215	330	170	234	40			89,5	85,5	149	97	146,0	3,0	115,0	4,9	3,7
100	350	235	365	202	282	55	1,6		109,5	105,5	169	112	234,0	2,9	189,0	4,4	2,8
125	400	275	425	285	388	65			137,5	131,5	199	138	376,0	2,7	303,0	4,2	2,7
150	480	305	480	320	443	50			160,0	159,0	224	169	394,0	4,5	405,0	4,3	2,4
200	600	390	610	417	585	80			210,0	210,0	284	230	652,0	5,5	590,0	6,7	2,3
250	730	540	915	--	--	230			258,0	--	434	--	1225,0	4,1	1231,0	4,1	2,7
300	850	680	1110	--	--	350			308,0	--	555	--	1873,0	3,7	1883,0	3,6	2,9
350	larger diameters on request												Kvs-values based upon clean screen !				
400																	
500																	

[1] V = Ratio of the free screen surface area to the area of the nominal diameters.

Zeta-value ... range of tolerance for Kvs-values acc. to DIN EN 60534.

Dimensions of flanges refer to page 5 or the ARI quick reference slide chart (available on request).

Y-Strainer with flanges: Face-to-face dimension FTF series 1 according to DIN EN 558-1 (DIN3202-1 series F1)

Y-Strainer with butt weld ends: Face-to-face dimension ETE series 1 according to DIN EN 12982 (DIN 3202-2 series S7)

Figure		10. / 12.050	22. / 23.050	34. / 35.050; 34. / 35.080;	52. / 55.059
Pos.	**Description**	**Material, Material-No.**			
1	Body	EN-JL1040, EN-GJL-250	EN-JS1049, EN-GJS-400-18U-LT	GP240GH+N, 1.0619+N	1.4408
2	Cover	DN<200: EN-JL1040 DN≥200: P265GH, 1.0425	DN<100: EN-JS1049 DN≥100: P265 GH, 1.0425	DN<100: P250GH, 1.0460 DN≥100: P265GH, 1.0425	X6CrNiMoTi17-12-2, 1.4571
3	Screen	X5CrNi18-10, 1.4301			X6CrNiMoTi17-12-2, 1.4571
3.1	Supporting basket*	X5CrNi18-10, 1.4301			X6CrNiMoTi17-12-2, 1.4571
4	Studs	25CrMo4, 1.7218			A 4-70
5	Hexagon nuts	C35E, 1.1181			A 4
6	Gasket	CrNi laminated both sides with pure graphite			
8	Bleed screw**	C35E, 1.1181			A 4
9	Sealing ring	St			Aramid

* Necessary at higher differential pressures (higher price)

** Bleed screw only on request (higher price)

Information / restrictions of technical rules have to be observed!

Operating instructions can be ordered on request by phone (+49 52 07) 994-0 or fax (+49 52 07) 994-158 or 159.

ARI-valves made of cast iron are not allowed to be operated in systems according to TRD 110.

A production allowance according to TRB 801 No. 45 exists (according to TRB 801 No. 45 cast iron is not allowed).

The engineer, designing a system or a plant, is responsible for the selection of the correct valve.

A supporting basket is necessary, with higher differential pressures, dependent on clogging-up (higher price).

ARI-Strainer flow diagrams refer to technical annex

Approvals according to DIN 3230 -3

Pressure-temperature-ratings

Flangeholes/-thickness tolerances acc. to DIN 2533 / DIN 2544 / DIN 2545

acc. to DIN EN 1092-2		Temperature								
Material	PN	-60°C up to <-10°C*	-10°C up to 120°C	150°C	200°C	250°C	300°C	350°C	400°C	450°C
EN-JL1040	6	---	6 bar	5,4 bar	4,8 bar	4,2 bar	3,6 bar	---	---	---
	16	---	16 bar	14,4 bar	12,8 bar	11,2 bar	9,6 bar	---	---	---
EN-JS1049	16	on request	16 bar	15,5 bar	14,7 bar	13,9 bar	12,8 bar	11,2 bar	---	---
	25	on request	25 bar	24,3 bar	23 bar	21,8 bar	20 bar	17,5 bar	---	---

acc. to DIN EN 1092-1		Temperature								
Material	PN	-60°C up to <-10°C*	-10°C up to 50°C	100°C	150°C	200°C	250°C	300°C	350°C	400°C	450°C
1.0619+N	25	18,7 bar	25 bar	23,3 bar	21,7 bar	19,4 bar	17,8 bar	16,1 bar	15 bar	14,4 bar	13,9 bar
	40	30 bar	40 bar	37,3 bar	34,7 bar	30,2 bar	28,4 bar	25,8 bar	24 bar	23,1 bar	22,2 bar
1.0460	25	18,7 bar	25 bar	23,3 bar	21,7 bar	19,4 bar	17,8 bar	16,1 bar	15 bar	14,4 bar	10 bar
	40	30 bar	40 bar	37,3 bar	34,7 bar	30,2 bar	28,4 bar	25,8 bar	24 bar	23,1 bar	16 bar
1.4408	16	16 bar	16 bar	14,9 bar	13,5 bar	12,4 bar	11,7 bar	11 bar	10,7 bar	10,2 bar	---
	25	25 bar	25 bar	23,3 bar	21,1 bar	19,4 bar	18,3 bar	17,2 bar	16,7 bar	16 bar	---
	40	40 bar	40 bar	37,3 bar	33,8 bar	31,1 bar	29,3 bar	27,6 bar	26,7 bar	25,6 bar	---

Intermediate values for max. permissible operational pressures can be determined by linear interpolation of the given temperature / pressure chart.

* Studs and nuts made of A4-70 (at temperatures below -10°C)

Flange dimensions

DN	PN 6			PN 16			PN 25			PN 40		
	∅ D	∅ K	n x ∅ d1	∅ D	∅ K	n x ∅ d1	∅ D	∅ K	n x ∅ d1	∅ D	∅ K	n x ∅ d1
15	80	55	4 x 11	95	65	4 x 14	95	65	4 x 14	95	65	4 x 14
20	90	65	4 x 11	105	75	4 x 14	105	75	4 x 14	105	75	4 x 14
25	100	75	4 x 11	115	85	4 x 14	115	85	4 x 14	115	85	4 x 14
32	120	90	4 x 14	140	100	4 x 18	140	100	4 x 18	140	100	4 x 18
40	130	100	4 x 14	150	110	4 x 18	150	110	4 x 18	150	110	4 x 18
50	140	110	4 x 14	165	125	4 x 18	165	125	4 x 18	165	125	4 x 18
65	160	130	4 x 14	185	145	4 x 18	185	145	8 x 18	185	145	8 x 18
80	190	150	4 x 18	200	160	8 x 18	200	160	8 x 18	200	160	8 x 18
100	210	170	4 x 18	220	180	8 x 18	235	190	8 x 22	235	190	8 x 22
125	240	200	8 x 18	250	210	8 x 18	270	220	8 x 26	270	220	8 x 26
150	265	225	8 x 18	285	240	8 x 22	300	250	8 x 26	300	250	8 x 26
200	320	280	8 x 18	340	295	12 x 22	360	310	12 x 26	375	320	12 x 30
250	---	---	---	405	355	12 x 26	425	370	12 x 30	450	385	12 x 33
300	---	---	---	460	410	12 x 26	485	430	16 x 30	515	450	16 x 33

Butt weld ends according to DIN EN 12627 - 4 (refer to page 6)

Please indicate when ordering:

1. Figure-No.
2. Nominal pressure
3. Nominal diameter
4. Special design / accessories

Example:

Figure 35050; nominal pressure PN40; nominal diameter DN100; with bleed screw.

Dimensions in mm
Weights in kg
1 bar ≙ 10^5 Pa ≙ 0,1 MPa
Kvs in m^3/h
1Kvs ≙ 1,16 Cv (US)

Sản phẩm khác



VAN CẦU HƠI GANG 02

Xem thêm VAN CẦU HƠI GANG 02



VAN CẦU HƠI GANG 01

Xem thêm VAN CẦU HƠI GANG 01



Van cầu hơi thép - Van đầu nóng 03

Xem thêm Van cầu hơi thép - Van đầu nóng 03



Van cầu hơi thép - Van đầu nóng 02

Xem thêm Van cầu hơi thép - Van đầu nóng 02

Van cầu hơi thép - Van đầu nóng 01

Xem thêm Van cầu hơi thép - Van đầu nóng 01

Van Cầu hơi KSB

Xem thêm Van Cầu hơi KSB