

1210-DF&DFM IRON VARIABLE ORIFICE

Fig. 1210-DFM
Flanged PN16 or PN25 for Single Unit Systems Conforms to BS7350



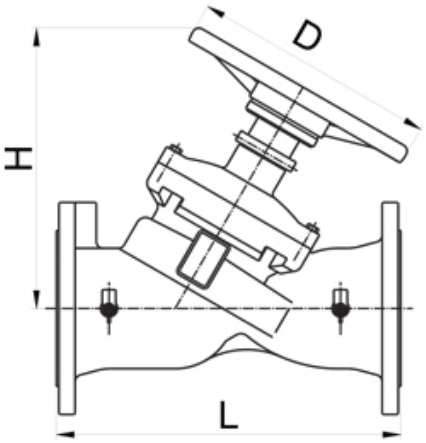

Specification

These are Y-pattem globe valves fitted with two pressure test valves to provide flow measurement, regulation and isolation. Valves conform to requirements of BS7350.

Application

Primarily used in injection or other circuits requiring a double regulating valve for systems balancing. Accuracy of flow measurement is ±5% at all open positions of the valve. Some reduction in accordance with BS 7350.

Pressure/Temerature Ratings

	PN16	PN25
Temperature℃	-10 to 120	
Working Pressure(Bar)	16	25
Test Pressure(Bar)	Shell:24 Seat:17.6	Shell:37.5 Seat:27.5

Materials

Part	Material	Specification
Body	Ductile	EN-JL 1050
Bonnet	Ductile	EN-JL 1050
Stem	Stainless Steel 410	BS970 410S21
Disc	EPDM Coated DI	EN-JL 1050
Gland〔65-150mm〕	Brass	EN 12165 CW617N
Gland〔200-300mm〕	Ductile	EN-JL 1050
Stem Nut	Brass	EN 12165 CW617N
Hand Wheel	Ductile	EN-JL 1050
Test Valve	Brass	EN 12165 CW602N
Packing	Graphite	Non-Asbestos

Dimensions, Coefficients

Nom. Size		Dimensions(mm)			Flow	Head loss
		L	H	D	Kv	K
$2^1/_2$	DN65	290	265	200	83.8	3.78
3	DN80	310	270	200	119.5	5.24
4	DN100	350	310	240	178.7	9.53
5	DN125	400	340	290	272.7	6.98
6	DN150	480	340	290	380	5.35
8	DN200	600	537	350	608	6.26
10	DN250	730	570	420	1292	5.57
12	DN300	850	690	420	1791	6.43

Fig. 1210-DF
ANSI Flanged Ends for Single Unit Systems Conforms to BS7350



Specification

These are Y-pattem globe valves fitted with two pressure test valves to provide flow measurement, regulation and isolation. Valves conform to requirements of BS7350.

Application

Primarily used in injection or other circuits requiring a double regulating valve for systems balancing. Accuracy of flow measurement is ±5% at all open positions of the valve. Some reduction in accordance with BS 7350.

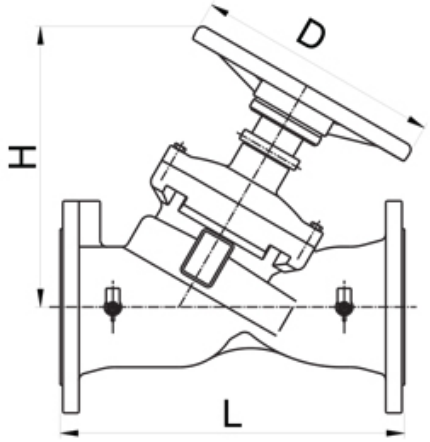

Pressure/Temerature Ratings

	PN16	PN25
Temperature℃	-10 to 120	
Working Pressure(Bar)	16	25
Test Pressure(Bar)	Shell:24	Shell:37.5
	Seat:17.6	Seat:27.5

Materials

Part	Material	ASTM Specification
Body	Ductile	A536 65-45-12
Bonnet	Ductile	A536 65-45-12
Stem	Stainless Steel 410	AISI 410
Disc	EPDM Coated DI	A536 65-45-12
Gland〔65-150mm〕	Brass	B124 C37700
Gland〔200-300mm〕	Ductile	A536 65-45-12
Stem Nut	Brass	B124 C37700
Hand Wheel	Ductile	A536 65-45-12
Test Valve	Brass	B453 C35330
Packing	Graphite	Non-Asbestos

Dimensions, Coefficients

Nom. Size		Dimensions(mm)			Flow	Head loss
		L	H	D	Kv	K
$2^1/_2$	DN65	290	265	200	83.8	3.78
3	DN80	310	270	200	119.5	5.24
4	DN100	350	310	240	178.7	9.53
5	DN125	400	340	290	272.7	6.98
6	DN150	480	340	290	380	5.35
8	DN200	600	537	350	608	6.26
10	DN250	730	570	420	1292	5.57
12	DN300	850	690	420	1791	6.43

Sản phẩm khác



1209-DF&DFM IRON FIXED ORIFICE

Xem thêm 1209-DF&DFM IRON FIXED ORIFICE



1209-BT&BTM BRONZE FIXED ORIFICE

Xem thêm 1209-BT&BTM BRONZE FIXED ORIFICE